Step 1

LAY YOUR FRAME

This is an example of a decking frame

FRAME TO BE LAID ONTO PAVING SLABS, OR ONTO GRASS OR SOIL

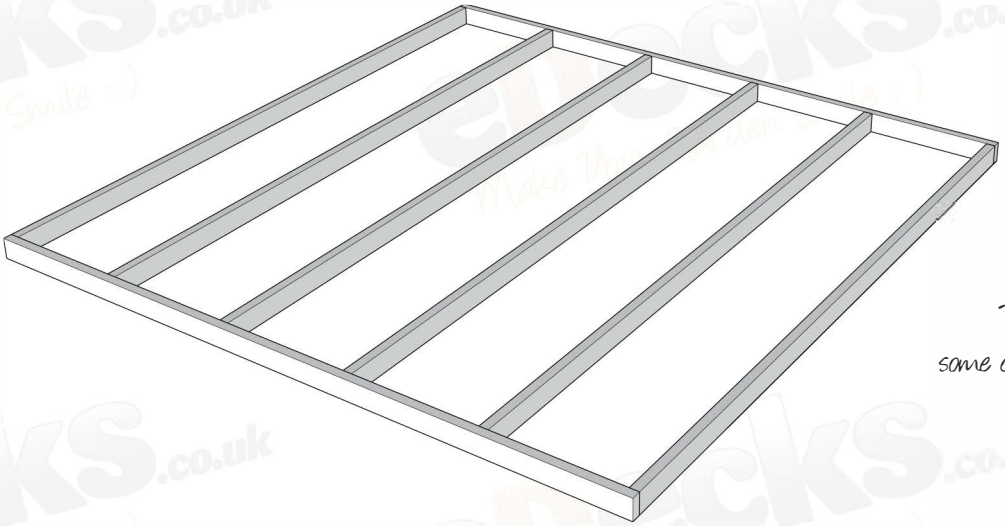

This may require some cutting to fit your size requrements

Using the decking joists provided in the kit build the perimiter first then evenly spread the remaining decking joists inside as shown in the example above.
Use the joist screws provided in your fixing kit to secure the timbers as per method below.

METHOD FOR SCREWING JOISTS

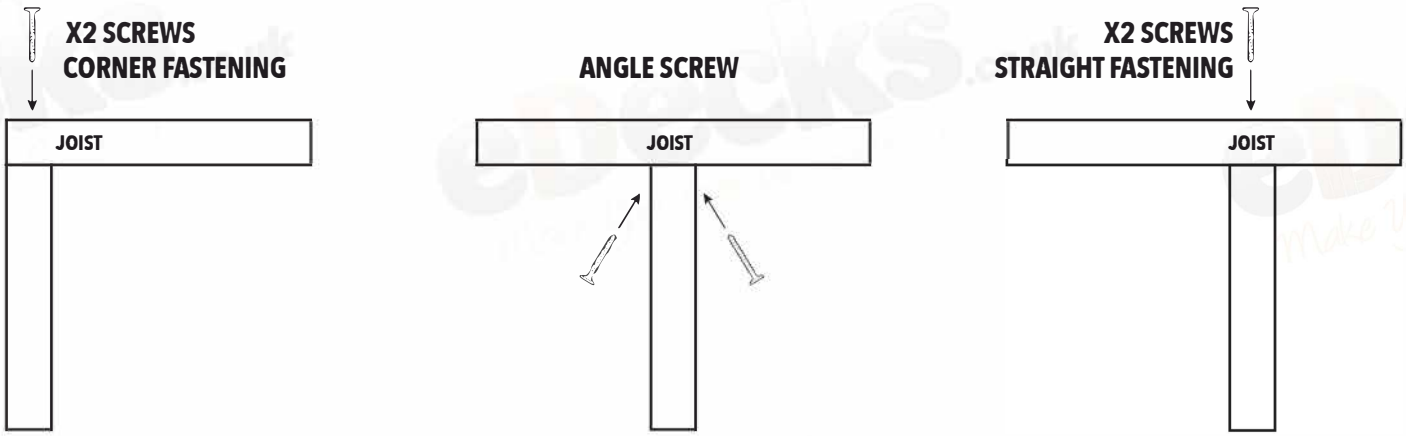

JOISTS TOP VIEW

Please make sure the frame fits the requirements for your chosen kit.
Dont forget to check your work with a level as you go!

All images are for illustration only, Please see individual item listings for actual item specifications

Step 2

FITTING THE PERGOLA POSTS

You are supplied with pergola posts. Accounting for the post sitting flush with the bottom of the base please select how hight you would like the pergola posts, please cut acordingly.

Each Pergola Post needssecuring in each corner and depending on the size of the kit posts may need fitting in between.

Install posts your kit begins to look like the below...

Please make sure your post notches line Up

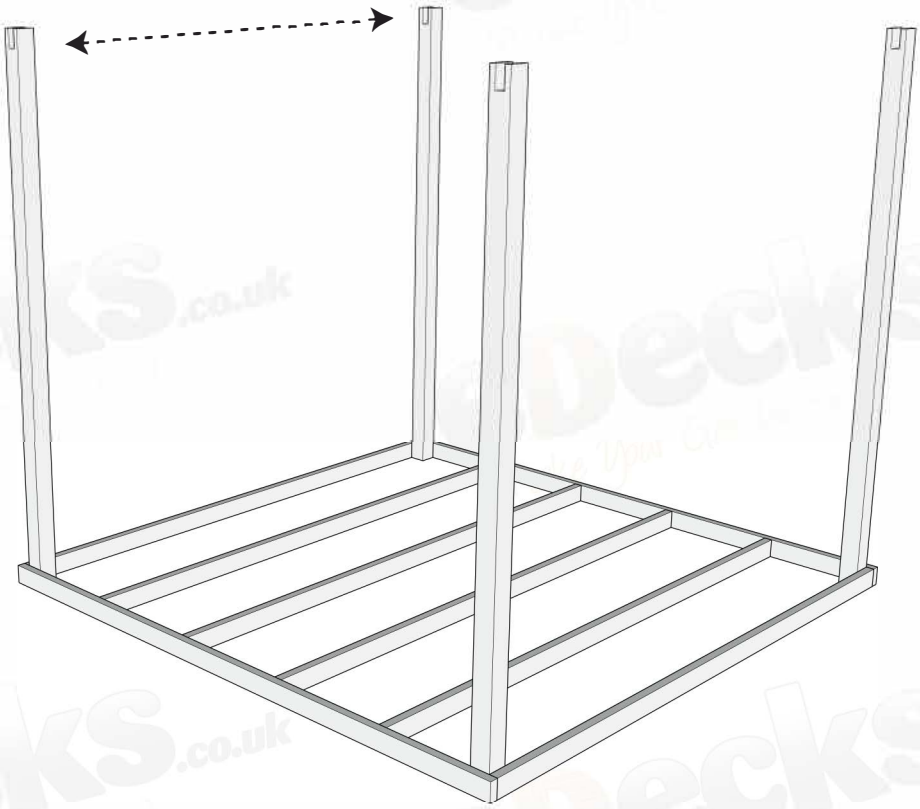

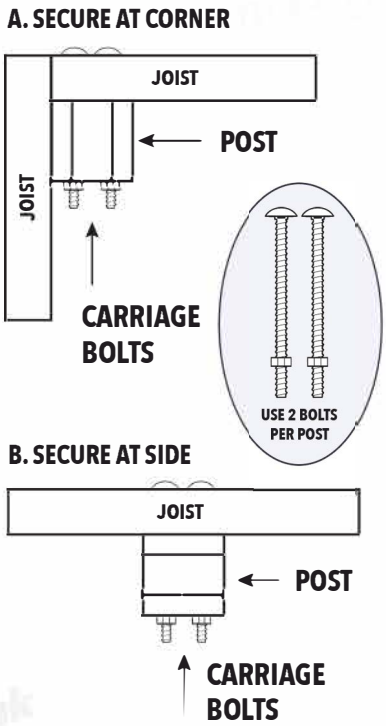

Dont forget to check your work with a level as you go!

All images are for illustration only, Please see individual item listings for actual item specifications

Step 3

INSTALL DECKING BOARDS

Decking boards should fit exactly to the frame, working in the opposite direction to the joist work, when laying the boards make sure you leave a 5mm gap between each board to allow room for expansion.

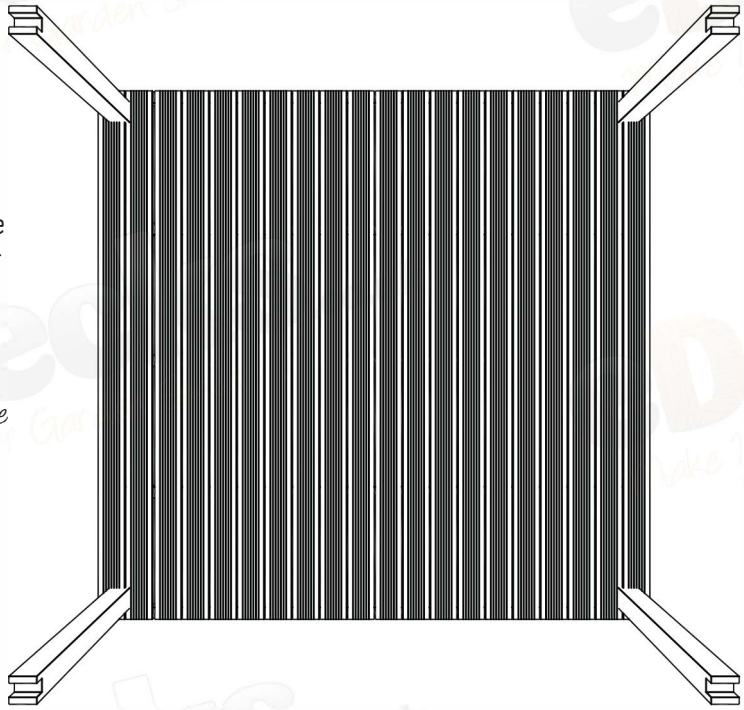

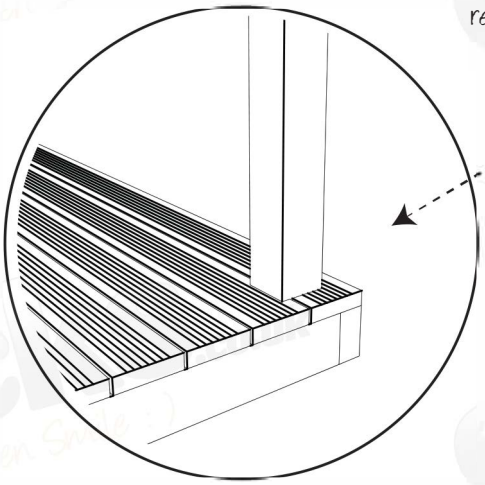

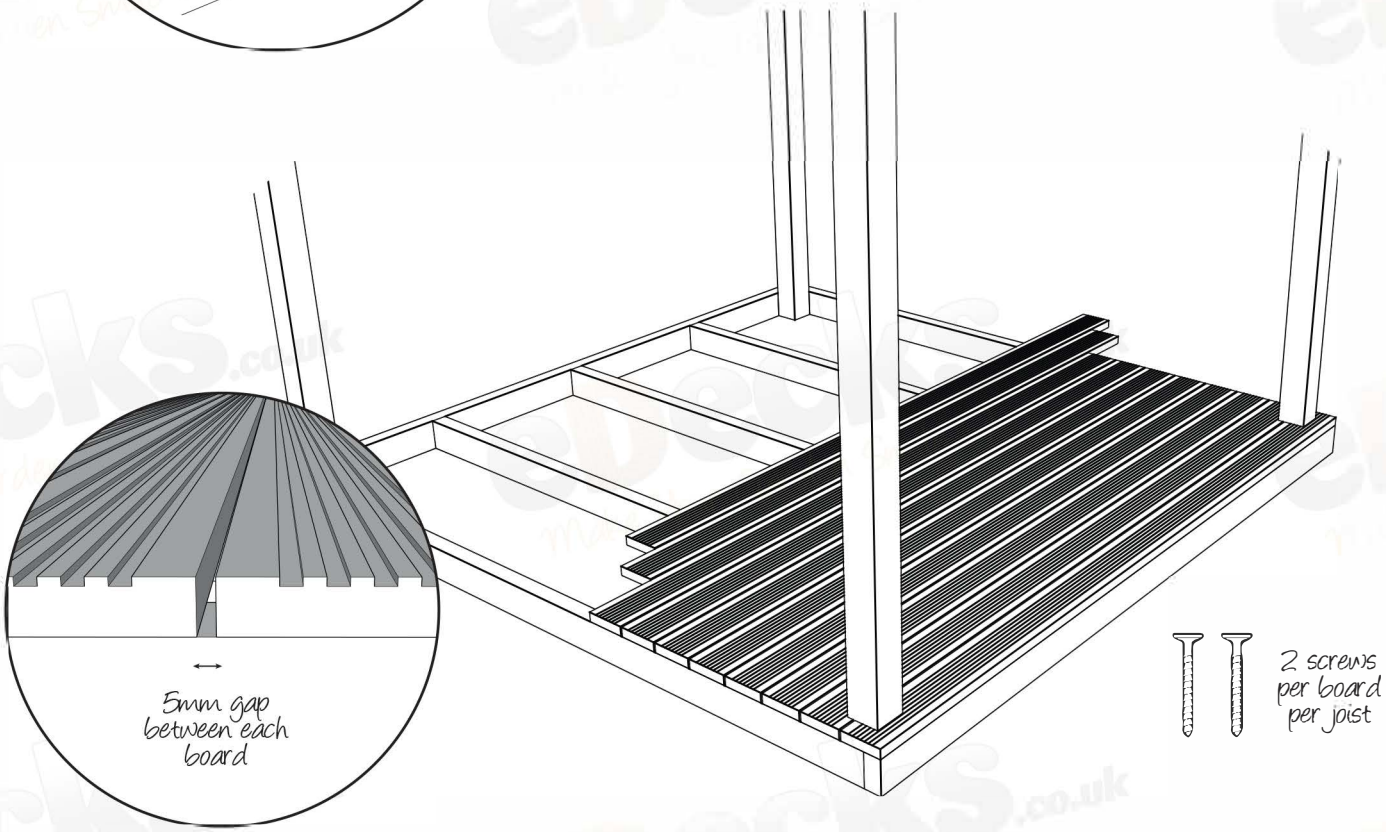

Dont forget to check your work with a level as you go!

All images are for illustration only, Please see individual item listings for actual item specifications

Step 4

INSTALL SUPORT RAFTERS

First secure the 2 supporting rafters to the posts..

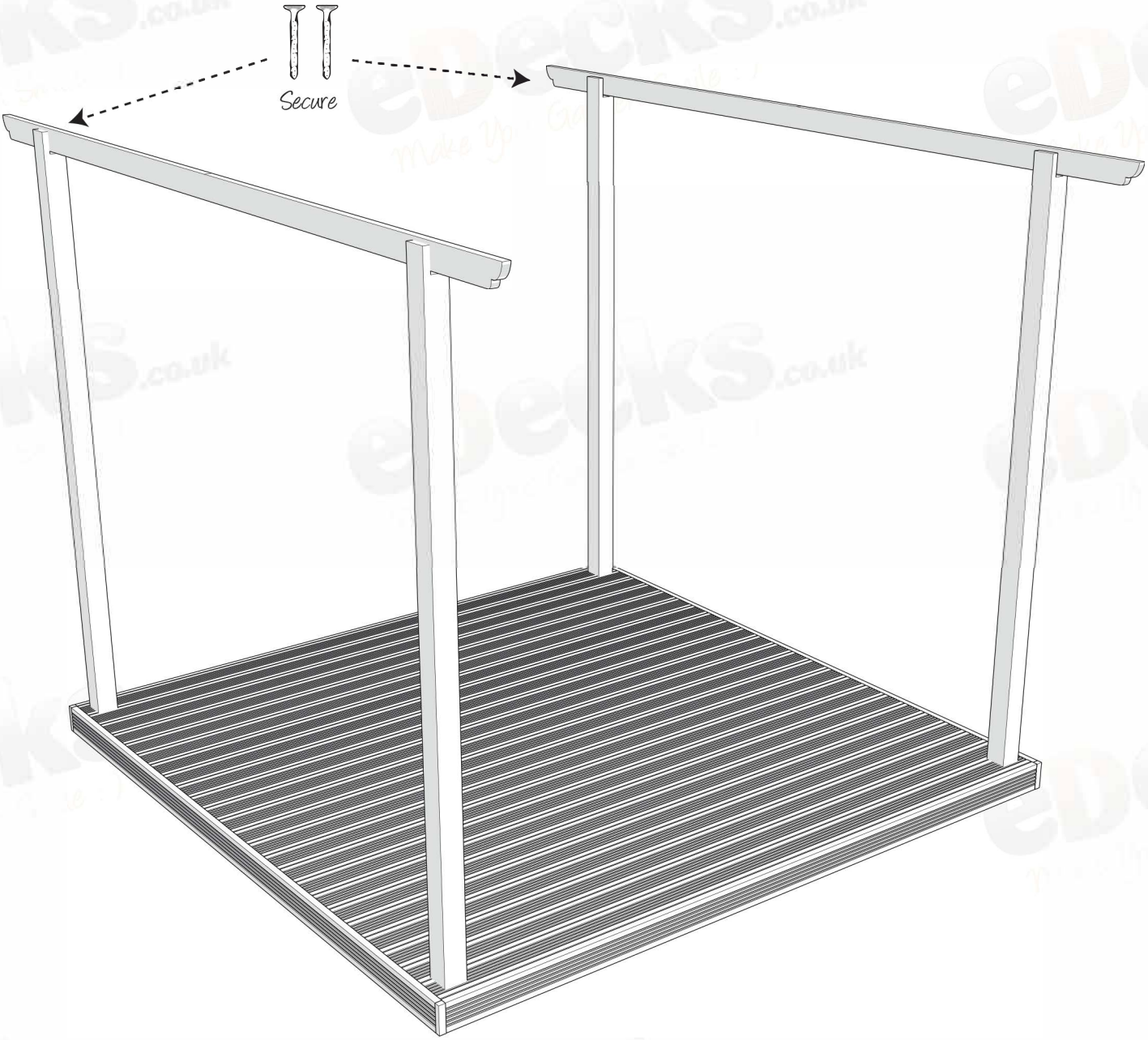

Dont forget to check your work with a level as you go!

All images are for illustration only, Please see individual item listings for actual item specifications

Step 5

INSTALL RAFTERS

Space the remainder of the rafters accross the top of the support rafters.

Using the Pergola Clips provided with your kit to secure

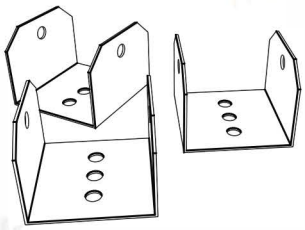

Dont forget to check your work with a level as you go!

All images are for illustration only, Please see individual item listings for actual item specifications

Step 6

HANDRAIL SYSTEM

Pre-Building the spindles and handrails is the next step. Accurately measure between pergola posts and cut the hand and base rails accordingly, there should be a 125mm gap between each spindle.

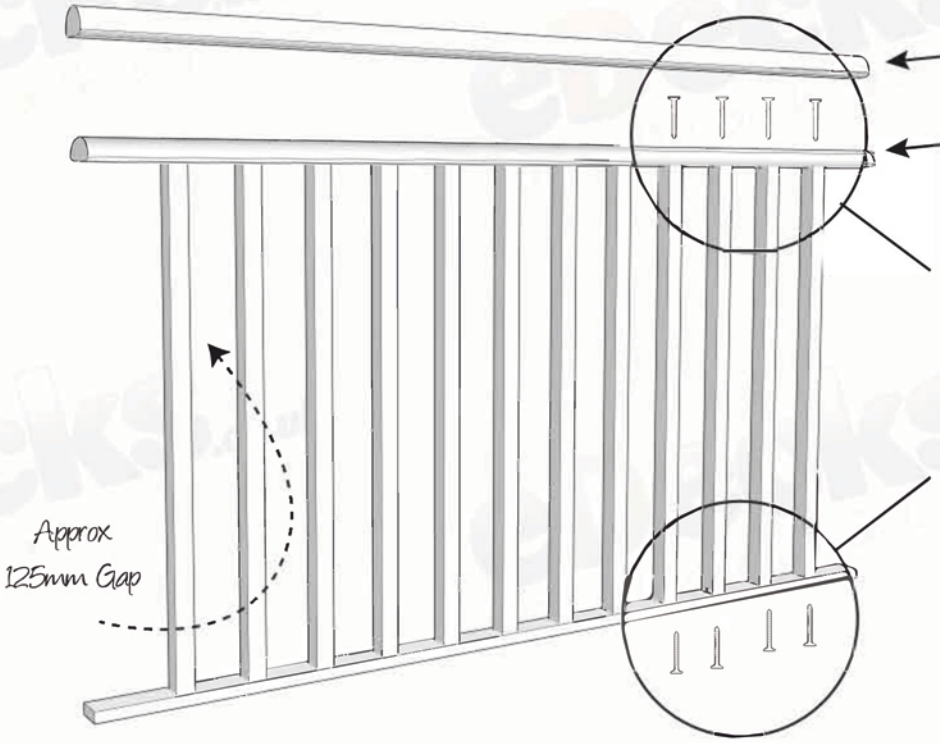

Then complete the handrail section by fixing the upper part of the handrail to the lower part of the handrail

Do this by screwing up through the underside of the lower handrail into the top part of the handrail

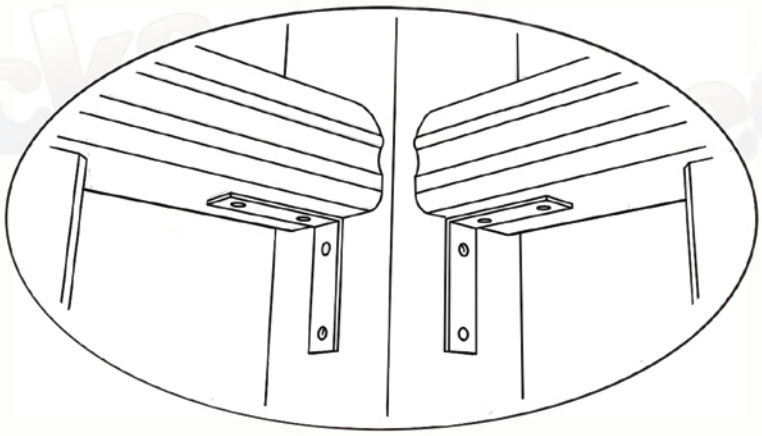

Once your handrail sections are complete - using angle brackets please proceed to install to the kit

Dont forget to check your work with a level as you go!

All images are for illustration only, Please see individual item listings for actual item specifications

Step 6

HANDRAIL SYSTEM

Pre-Building the spindles and handrails is the next step. Accurately measure between pergola posts and cut the hand and base rails accordingly, there should be a 125mm gap between each spindle.

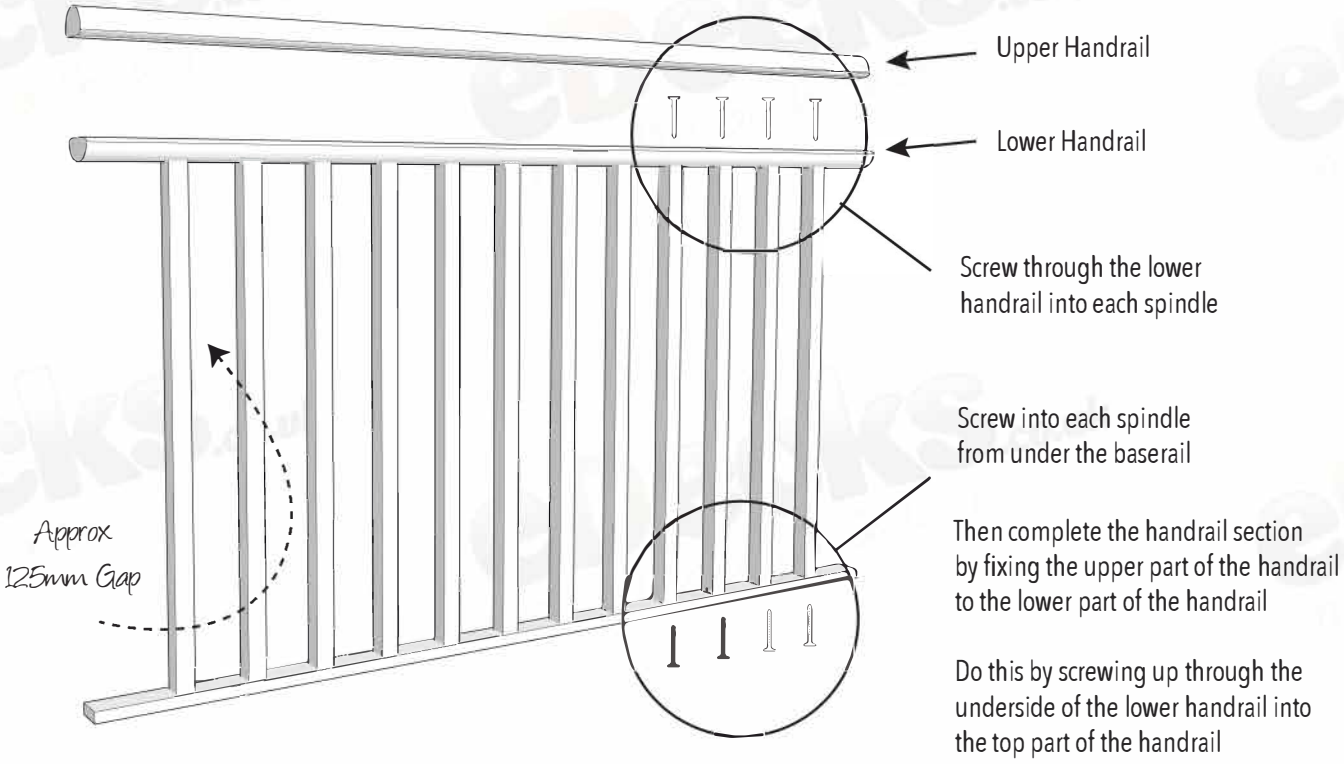

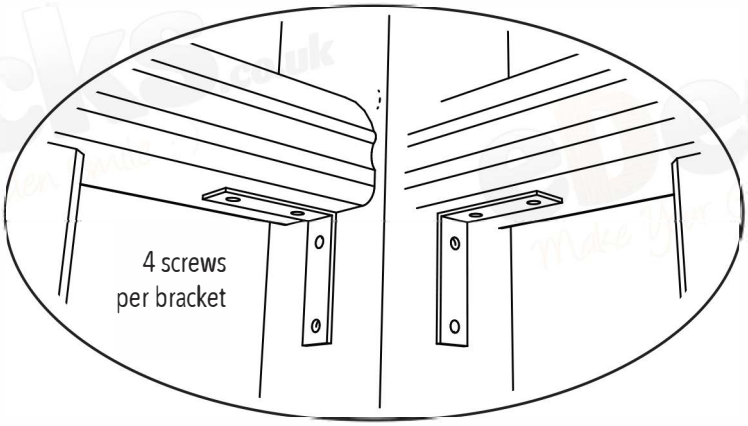

Once your handrail sections are complete - using angle brackets please proceed to install to the kit

Dont forget to check your work with a level as you go!

All images are for illustration only, Please see individual item listings for actual item specifications

Step 7

INSTALL FASCIA BOARDS

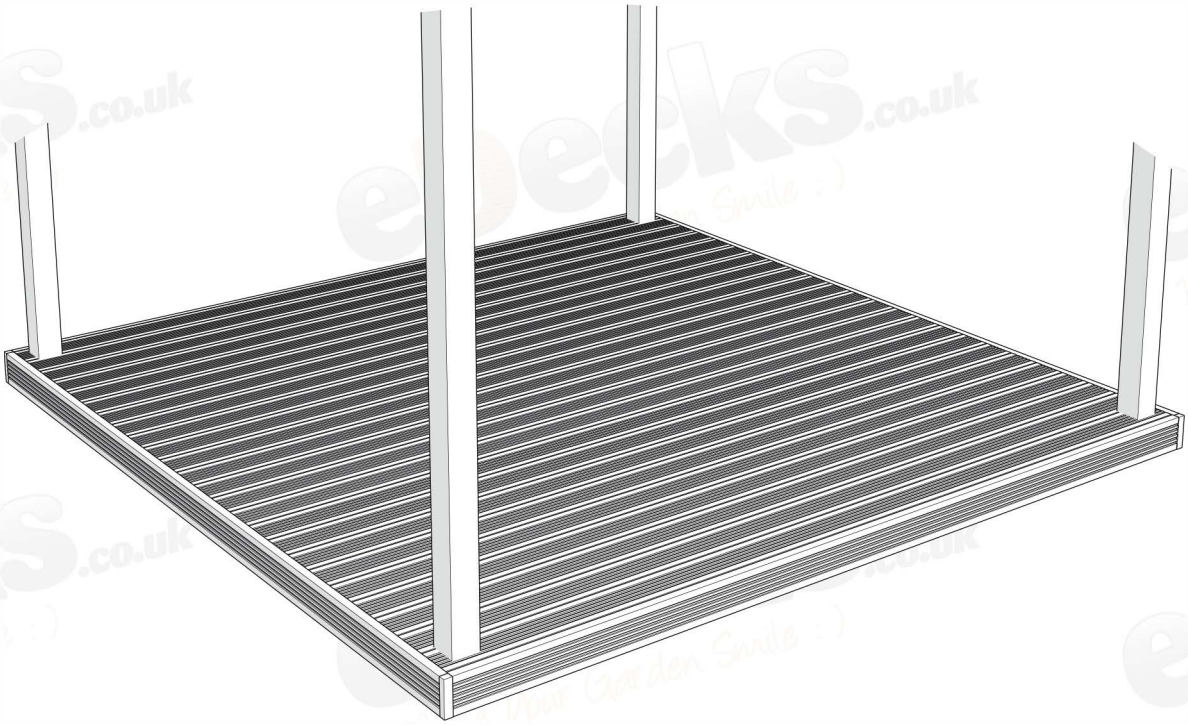

DOLLY

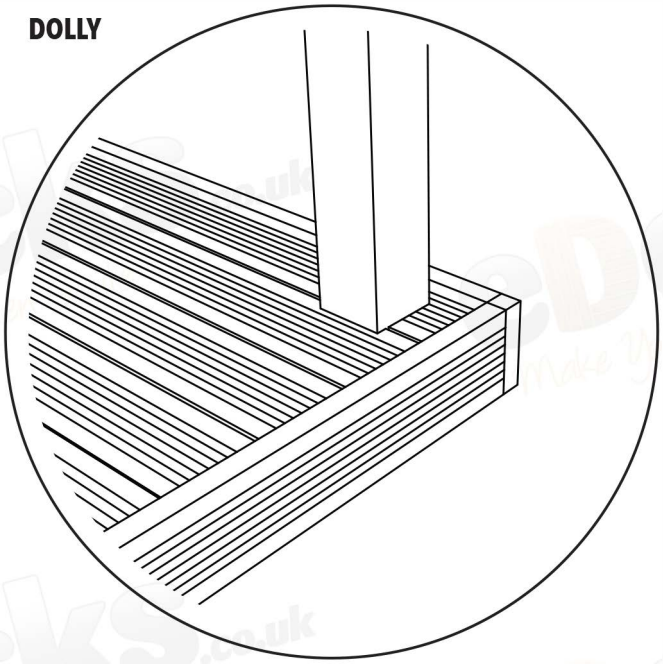

MITRE

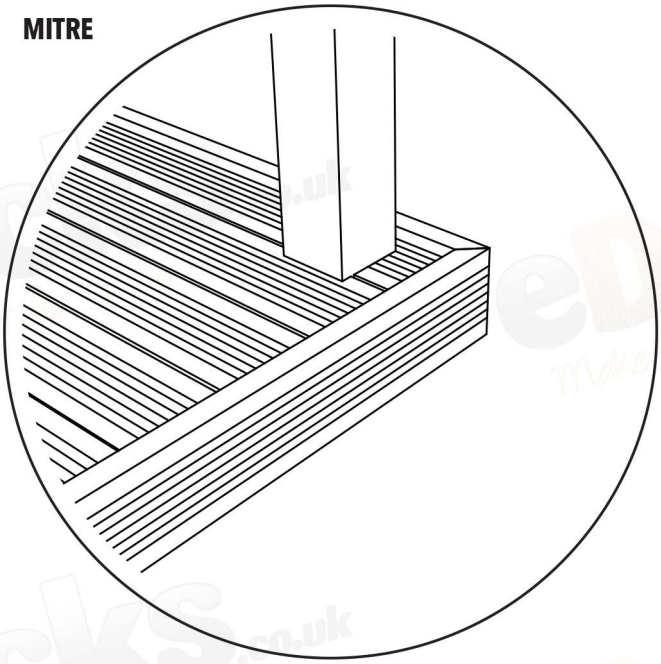

Dont forget to check your work with a level as you go!

All images are for illustration only, Please see individual item listings for actual item specifications

Step 8

FINISH!

This is an example of the finished pergola.

Once this is complete - Sit back and enjoy!

All images are for illustration only, Please see individual item listings for actual item specifications